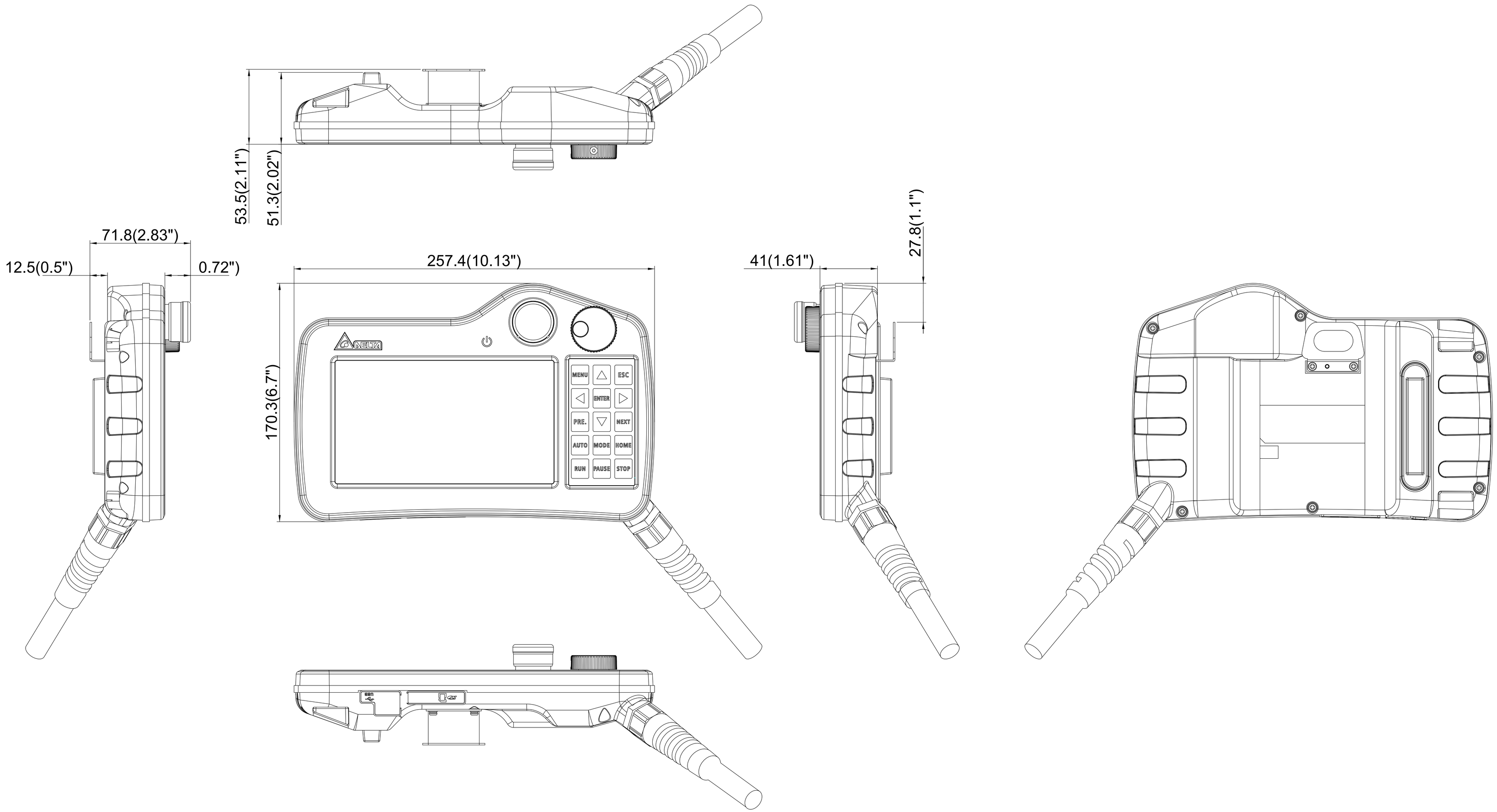

REV.	ECN NO.
00	----------

Pobrano z: https://panele-hmi.pl/mobilny-panel-dotykowy-dop-h07e46a-delta-electronics